AGC 200 Advanced Genset Controller
DATA SHEET



Operation modes

- Automatic mains failure/ATS
- Island operation
- Fixed power/base load
- Peak shaving
- Load takeover
- Mains power export
- Multiple genset load sharing (128)

Display and unit front

- Soft key for all operation and ease of use
- Full text LCD display (240 x 128 pixel)
- Operational down to -40°C/F including LCD
- kWh meter
- Operation hours/start/maintenance counters
- Event recorder with real-time clock (up to 4 GB)
- Push-buttons for start and stop
- Push-buttons for breaker operations
- Status texts
- Alarm indication
- Prepared for additional operator panels

General

- USB ver. 2 interface to PC
- Free PC utility software for commissioning
- Mini SCADA in PC utility software
- SD card slot for lifetime logging (under development)
- 3/2/1-phase monitoring

Engine control

- CAN J1939 and MTU MDEC/ADEC communication
- Start/stop sequences
- KWP 2000 – DM1 log – DM2 log

M-Logic

- Simple logic configuration tool
- Selectable input/output events

Optional applications

- Control of up to 16 gensets
- Control of up to 8 bus tie breakers
- Load-dependent start/stop operation
- Priority selection of gensets
- Ground relay control
- Plant division into sections for individual functionality
- Multiple gensets, load management
- Multi-master system

DEIF A/S · Frisenborgvej 33 · DK-7800 Skive
Tel.: +45 9614 9614 · Fax: +45 9614 9615
info@deif.com · www.deif.com

Document no.: 4921240362J
SW version 3.5X.X or later

Single-line application diagrams

AGC 212/222 Island

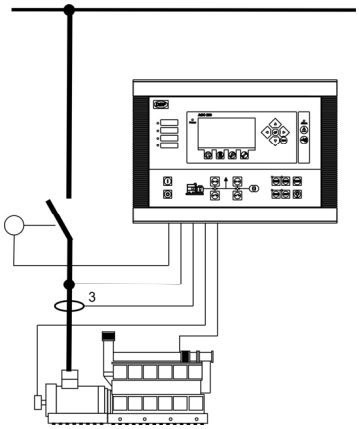

AGC 213 Mains failure. With separate transducer: Peak shaving, load take-over and mains power export

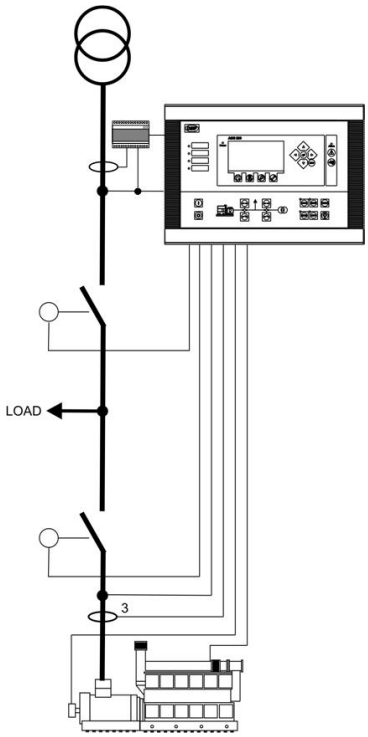

AGC 233/243 Mains failure, peak shaving, load takeover and mains power export

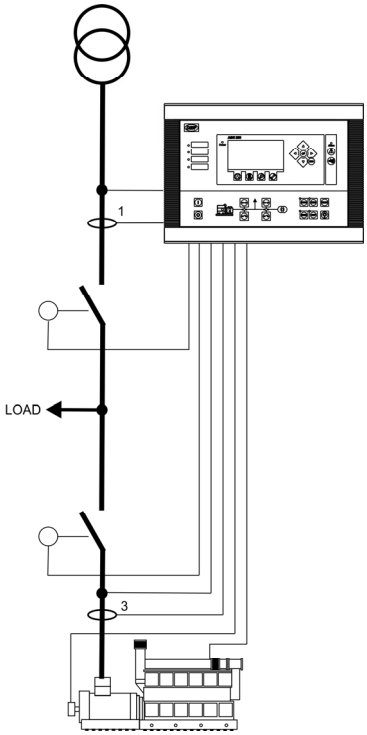

AGC 232 Multiple gensets, load sharing, up to 128 generators

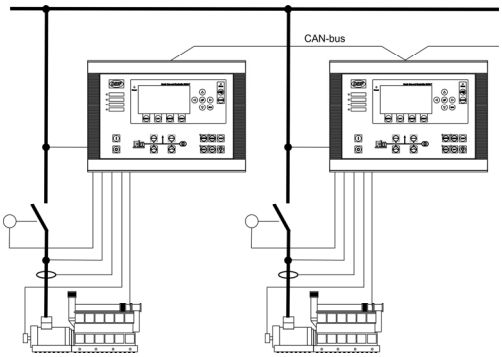

AGC 242 (222/243)/244 Island power management, up to 16 generators, up to 8 bus tie breakers

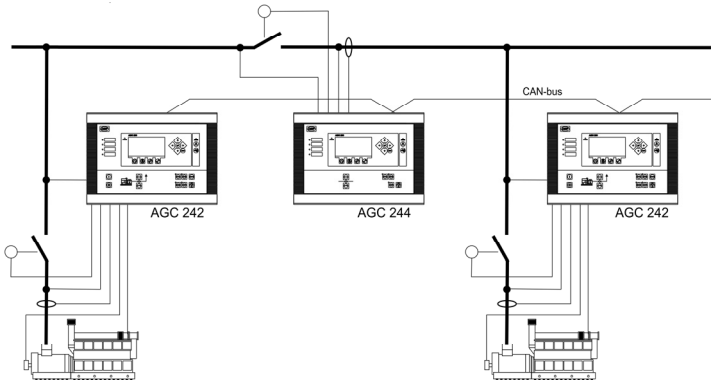

AGC 242(222/243)/244/245 Multiple gensets, load sharing, up to 16 generators, up to 8 bus tie breakers

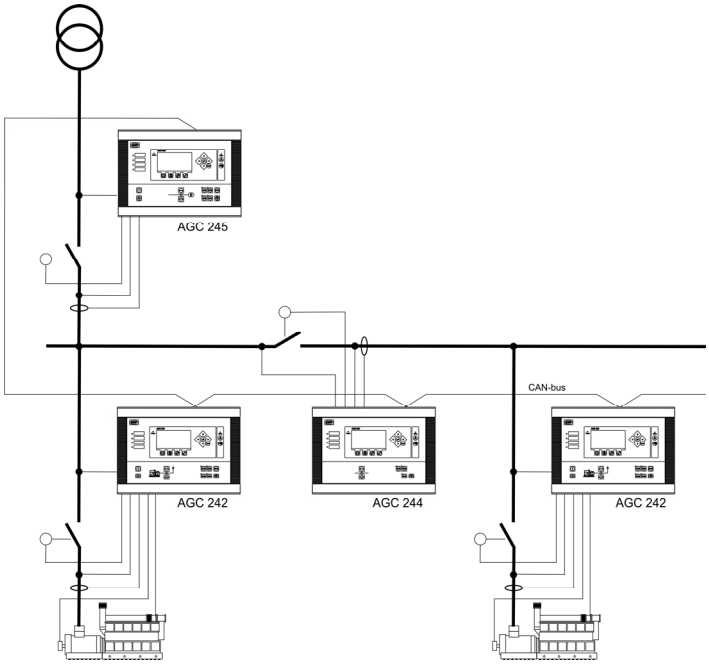

AGC 242(222/243)/244/246 Multiple gensets, load sharing, up to 16 generators, up to 8 tie breakers

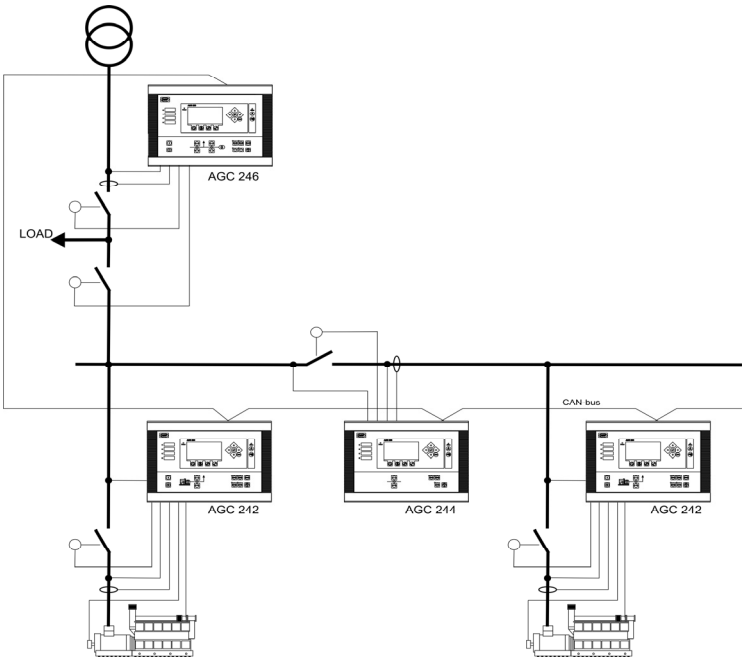

Standard functions

Model	AGC 200									
	AGC 212	AGC 213	AGC 222	AGC 232	AGC 233	AGC 242	AGC 243	AGC 244	AGC 245	AGC 246
Measuring										
Generator/busbar voltage (3-phase/4-wire)	✓	✓	✓	✓	✓	✓	✓			
Generator current (3 x true r.m.s.)	✓	✓	✓	✓	✓	✓	✓			
CT selectable 1/5	✓	✓	✓	✓	✓	✓	✓	✓	✓	✓
100 to 690V AC selectable	✓	✓	✓	✓	✓	✓	✓	✓	✓	✓
Mains/busbar voltage (3-phase/4-wire)		✓	✓	✓	✓	✓	✓	✓	✓	✓
Mains current or neutral current (1 x true r.m.s.) or ground current with 3rd harmonic filter				✓	✓	✓	✓	✓	✓	✓
Selectable AC configuration 3-phase/3-wire 3-phase/4-wire 2-phase/3-wire L1L3 (180° between phases) 2-phase/3-wire L1L2 (120° between phases) 1-phase/2-wire L1	✓	✓	✓	✓	✓	✓	✓	✓	✓	✓
Phase angle compensation gen/busbar/mains Synchronising over a D/Y transformer	✓	✓	✓	✓	✓	✓	✓	✓	✓	✓
Single genset Genset modes										
Island operation	✓	✓	✓	✓	✓	✓	✓			
Fixed power/base load		✓			✓		✓			
AMF & ATS (auto mains failure operation)		✓			✓		✓			
Peak shaving		✓			✓		✓			
Load takeover		✓			✓		✓			
Mains power export		✓			✓		✓			
AMF mode		✓			✓		✓			
Multi-genset Power management plant mode										
Island operation			✓			✓	✓			
Fixed power/base load			✓			✓	✓		✓	✓
Peak shaving			✓			✓	✓		✓	✓
Load takeover			✓			✓	✓		✓	✓
Mains power export			✓			✓	✓		✓	✓
AMF mode			✓			✓	✓		✓	✓
General										
Status relay	✓	✓	✓	✓	✓	✓	✓	✓	✓	✓
16A crank and run relay	✓	✓	✓	✓	✓	✓	✓			
Lamp test	✓	✓	✓	✓	✓	✓	✓	✓	✓	✓
USB interface to PC	✓	✓	✓	✓	✓	✓	✓	✓	✓	✓
Temperature-dependent cooling down Time-based cooling down Emergency cooling down	✓	✓	✓	✓	✓	✓	✓			
kWh meter Produced kWh meter day Produced kWh meter week Produced kWh meter year Produced kWh meter total	✓	✓	✓	✓	✓	✓	✓	✓	✓	✓
Operation hours and emergency hours counter GB and MB operation counter Start attempt counter Maintenance counters, hours and days	✓	✓	✓	✓	✓	✓	✓			
Free PC utility software for commissioning	✓	✓	✓	✓	✓	✓	✓	✓	✓	✓
Control										
Start/stop sequences	✓	✓	✓	✓	✓	✓	✓			
Synchronisation	✓	✓	✓	✓	✓	✓	✓	✓	✓	✓
Nos. of breakers/contactors to be controlled	1	2	1	1	2	1/2	1/2	1	1	2

Model	AGC 200									
	AGC 212	**AGC 213**	**AGC 222**	**AGC 232**	**AGC 233**	**AGC 242**	**AGC 243**	**AGC 244**	**AGC 245**	**AGC 246**
Run coil	✓	✓	✓	✓	✓	✓	✓			
Stop coil with wire break supervision				✓	✓	✓	✓			
J1939 regulation governor/AVR	✓	✓	✓	✓	✓	✓	✓			
Relay outputs for governor control/AVR	✓	✓	✓	✓	✓	✓	✓			
Analogue outputs for governor control/AVR	IOM 220	IOM 220	IOM 220	IOM 220	IOM 220	IOM 220	IOM 220			
Digital load sharing (CAN share), with first up discrimination				✓	✓	✓	✓			
Analogue load sharing	IOM 230	IOM 230	IOM 230	IOM 230	IOM 230	IOM 230	IOM 230			
Event LOG with real-time clock Alarm LOG with real-time clock Battery test LOG with real-time clock Engine diagnostic active alarm LOG Engine diagnostic historical alarm LOG	✓	✓	✓	✓	✓	✓	✓	✓	✓	✓
I/Os										
Inputs (configurable)	7	7	7	14	14	14	14	14	14	14
Relay outputs (configurable)	9	9	9	14	14	14	14	14	14	14
Multi-inputs (configurable)	3	3	3	3	3	3	3	3	3	3
Emergency input	1	1	1	1	1	1	1	1	1	1
Pick-up MPU/W/PNP/NPN/tacho	1	1	1	1	1	1	1	1	1	1
D+ alternator field flash circuit	✓	✓	✓	✓	✓	✓	✓			
CANbus communication interfaces	1	1	2	3	3	3	3	3	3	3
RS485/Modbus RTU slave interface(s)	1	1	1	1	1	1	1	1	1	1
TCP/IP Modbus communication	1	1	1	1	1	1	1	1	1	1
SD card				1	1	1	1	1	1	1
USB 2.0 service port	1	1	1	1	1	1	1	1	1	1
M-Logic										
Simple logic configuration tool	✓	✓	✓	✓	✓	✓	✓	✓	✓	✓
Selectable input events	✓	✓	✓	✓	✓	✓	✓	✓	✓	✓
Selectable output commands	✓	✓	✓	✓	✓	✓	✓	✓	✓	✓
Power management functions										
Load-dependent start/stop			✓			✓	✓			
Priority selection Manual Running hours Fuel optimisation			✓			✓	✓			
Ground relay control			✓			✓	✓			
ATS control						✓			✓	✓
Safety stop (fail class = trip and stop)			✓			✓	✓			
Load management			✓			✓	✓		✓	✓
Secured mode			✓			✓	✓			
Quick setup/broadcast			✓			✓	✓	✓	✓	✓
Base load			✓			✓	✓			
Heavy consumer (HC)			✓			✓	✓		✓	✓
Asymmetric load sharing (LS)			✓			✓	✓			
Common PF control			✓			✓	✓		✓	✓
CAN flags			✓			✓	✓	✓	✓	✓

Model			AGC 200									
			AGC 212	AGC 213	AGC 222	AGC 232	AGC 233	AGC 242	AGC 243	AGC 244	AGC 245	AGC 246
Protection	(# alarms)	(ANSI)										
Reverse power	x2	32R	✓	✓	✓	✓	✓	✓	✓	✓	✓	✓
Short-circuit	x2	50P/N	✓	✓	✓	✓	✓	✓	✓	✓	✓	✓
Overcurrent	x4	51	✓	✓	✓	✓	✓	✓	✓	✓	✓	✓
Voltage-dependent overcurrent	x1	51V	✓	✓	✓	✓	✓	✓	✓	✓	✓	✓
Overvoltage	x2	59P	✓	✓	✓	✓	✓	✓	✓	✓	✓	✓
Undervoltage	x3	27P	✓	✓	✓	✓	✓	✓	✓	✓	✓	✓
Overfrequency	x3	81O	✓	✓	✓	✓	✓	✓	✓	✓	✓	✓
Underfrequency	x3	81R	✓	✓	✓	✓	✓	✓	✓	✓	✓	✓
Unbalanced voltage	x1	47	✓	✓	✓	✓	✓	✓	✓	✓	✓	✓
Unbalanced current	x1	46	✓	✓	✓	✓	✓	✓	✓	✓	✓	✓
Underexcitation or VAr import	x1	32RV	✓	✓	✓	✓	✓	✓	✓	✓	✓	✓
Overexcitation or VAr export	x1	32FV	✓	✓	✓	✓	✓	✓	✓	✓	✓	✓
Overload	x5	32F	✓	✓	✓	✓	✓	✓	✓	✓	✓	✓
Busbar/mains overvoltage	x3	59P	✓	✓	✓	✓	✓	✓	✓	✓	✓	✓
Busbar/mains undervoltage	x4	27P	✓	✓	✓	✓	✓	✓	✓	✓	✓	✓
Busbar/mains overfrequency	x3	81O	✓	✓	✓	✓	✓	✓	✓	✓	✓	✓
Busbar/mains underfrequency	x4	81U	✓	✓	✓	✓	✓	✓	✓	✓	✓	✓
Busbar/mains unbalanced voltage	x1	47	✓	✓	✓	✓	✓	✓	✓	✓	✓	✓
Load shed via current # levels	x3	51	✓	✓	✓	✓	✓	✓	✓	✓	✓	✓
Load shed via busbar freq. # levels	x3	81	✓	✓	✓	✓	✓	✓	✓	✓	✓	✓
Load shed via overload # levels	x3	32	✓	✓	✓	✓	✓	✓	✓	✓	✓	✓
Load shed via fast overload # levels	x3	32	✓	✓	✓	✓	✓	✓	✓	✓	✓	✓
Multi-analogue input 1/with wire break supervision	x2	NA	✓	✓	✓	✓	✓	✓	✓	✓	✓	✓
Multi-analogue input 2/with wire break supervision	x2	NA	✓	✓	✓	✓	✓	✓	✓	✓	✓	✓
Multi-analogue input 3/with wire break supervision	x2	NA	✓	✓	✓	✓	✓	✓	✓	✓	✓	✓
Emergency stop	x1	1	✓	✓	✓	✓	✓	✓	✓	✓	✓	✓
Overspeed	x2	12	✓	✓	✓	✓	✓	✓	✓			
Low battery voltage	x1	27DC	✓	✓	✓	✓	✓	✓	✓	✓	✓	✓
High battery voltage	x1	59DC	✓	✓	✓	✓	✓	✓	✓	✓	✓	✓
Generator breaker external trip	x1	5	✓	✓	✓	✓	✓	✓	✓			
Mains breaker external trip	x1	5	✓	✓	✓	✓	✓	✓	✓		✓	✓
GB synchronisation failure	x1	25	✓	✓	✓	✓	✓	✓	✓	✓	✓	✓
GB open failure	x1	52BF	✓	✓	✓	✓	✓	✓	✓	✓	✓	✓
GB close failure	x1	52BF	✓	✓	✓	✓	✓	✓	✓	✓	✓	✓
GB position failure	x1	52BF	✓	✓	✓	✓	✓	✓	✓	✓	✓	✓
MB synchronisation failure	x1	25		✓			✓		✓		✓	✓
MB open failure	x1	52BF		✓			✓		✓		✓	✓
MB close failure	x1	52BF		✓			✓		✓		✓	✓
MB position failure	x1	52BF		✓			✓		✓		✓	✓
Close before excitation failure	x1	48	✓	✓	✓	✓	✓	✓	✓			
Phase sequence error	x1	47	✓	✓	✓	✓	✓	✓	✓	✓	✓	✓
Deload error	x1	34	✓	✓	✓	✓	✓	✓	✓	✓	✓	✓
Crank failure	x1	48	✓	✓	✓	✓	✓	✓	✓			
Running feedback error	x1	34	✓	✓	✓	✓	✓	✓	✓			
MPU wire break	x1	NA	✓	✓	✓	✓	✓	✓	✓			
Start failure	x1	48	✓	✓	✓	✓	✓	✓	✓			
Hz/V failure	x1	53	✓	✓	✓	✓	✓	✓	✓			
Stop failure	x1	48	✓	✓	✓	✓	✓	✓	✓			
Stop coil supervision (wire break)	x1	5	✓	✓	✓	✓	✓	✓	✓			
Engine heater	x1	26	✓	✓	✓	✓	✓	✓	✓			
Battery test alarm	x1	NA	✓	✓	✓	✓	✓	✓	✓			
Max. ventilation	x2	NA	✓	✓	✓	✓	✓	✓	✓	✓	✓	✓
Not in Auto	x1	34	✓	✓	✓	✓	✓	✓	✓	✓	✓	✓
Fuel fill check error	x1	NA	✓	✓	✓	✓	✓	✓	✓			
EIC warning via J1939/comm. link	x1	NA	✓	✓	✓	✓	✓	✓	✓			

Model			AGC 200									
			AGC 212	AGC 213	AGC 222	AGC 232	AGC 233	AGC 242	AGC 243	AGC 244	AGC 245	AGC 246
EIC shutdown via J1939/comm. link	x1	NA	✓	✓	✓	✓	✓	✓	✓			
EIC coolant temperature via J1939/comm. link	x2	NA	✓	✓	✓	✓	✓	✓	✓			
EIC oil pressure via J1939/comm. link	x2	NA	✓	✓	✓	✓	✓	✓	✓			
EIC oil temperature via J1939/comm. link	x2	NA	✓	✓	✓	✓	✓	✓	✓			
EIC communication error	x1	NA	✓	✓	✓	✓	✓	✓	✓			

Setup

Setup is secured by three levels of passwords and is easily done via a menu structure on the display or via a PC and the free Multi-line 2 Windows® based PC utility software. The PC utility software can be downloaded free of charge from www.deif.com. This utility software allows the operator to monitor all relevant information during commissioning, save and upload/download settings, download software updates and even control the genset either from a USB connection local to the unit or over Ethernet from anywhere in the world.

M-Logic

Customise your control system to your specific needs with this Boolean logic included in the AGC. Control functions can be modified or created based on digital inputs, J1939/comm. link data, analogue inputs, alarms, limits, specific functions or operating conditions. This powerful system configuration tool is included in all AGC systems without additional cost and is programmed by the free PC utility software.

Available variants

Type	Variant	Description	Item no.	Note
AGC 212	01	AGC-212 + A1 + A5	2912420030-01	
AGC 213	02	AGC-213 + A1 + A5	2912420040-02	
AGC 222	03	AGC-222 + A1 + A5	2912420130-03	
AGC 232	04	AGC-232 + A1 + A5	2912420060-04	
AGC 233	05	AGC-233 + A1 + A5	2912420050-05	
AGC 242	06	AGC-242 + A1 + A5	2912420070-06	
AGC 243	07	AGC-243 + A1 + A5	2912420100-07	
AGC 244	08	AGC-244 + A1 + A5	2912420080-08	
AGC 245	09	AGC-245 + A1 + A5	2912420090-09	
AGC 246	10	AGC-246 + A1 + A5	2912420120-10	
AGC 212 with IOM 220	11	AGC 212 with IOM 220 + A1 + A5	2912420030-11	
AGC 213 with IOM 220	12	AGC 213 with IOM 220 + A1 + A5	2912420040-12	
AGC 222 with IOM 220	13	AGC 222 with IOM 220 + A1 + A5	2912420130-13	
AGC 232 with IOM 220	14	AGC 232 with IOM 220 + A1 + A5	2912420060-14	
AGC 233 with IOM 220	15	AGC 233 with IOM 220 + A1 + A5	2912420050-15	
AGC 242 with IOM 220	16	AGC 242 with IOM 220 + A1 + A5	2912420070-16	
AGC 243 with IOM 220	17	AGC 243 with IOM 220 + A1 + A5	2912420100-17	

Available options

In order to perfectly match the product solution to specific applications, the functionality of the AGC 200 can be equipped with a number of available options. The options selected by the customer will be integrated in the standard AGC 200, hereby securing the same user interface unaffected by whether the application needs a highly complex or a more basic genset controller.

Option	Description		Option type	Note
A	**Loss of mains protection package**	**(ANSI)**		
A1	Vector jump df/dt (ROCOF) Undervoltage with programmable time delay (6 point curve) U_t < Undervoltage and reactive power, U and Q<	**(78)** **(81R)** **(27)** **(27+32RV)**	Software	
A4	Positive sequence (mains) voltage low	**(27)**	Software	
A5	Directional overcurrent	**(67)**	Software	
C	**Generator add-on protection package**	**(ANSI)**		
C2	Negative sequence voltage high Negative sequence current high Zero sequence voltage high Zero sequence current high Power-dependent reactive power (12 point true field loss emulating the generator capability curve) IEC/IEEE inverse time overcurrent (curves: 6 fixed, 1 adjustable)	**(47)** **(46)** **(59G)** **(50G)** **(40)** **(51)**	Software	
H	**Serial communication**			
H2	Modbus RTU (RS485)		Software	
	Heatfoil for display			
L2	Display -40°C (-40°F)		Hardware	
N	**Ethernet communication**			
N5	Ethernet TCP/IP Modbus RTU		Software	

Available accessories

Accessories	Description	Item no.	Note
Operator panels			
Additional Operator Panel, AOP-2 (X4)	16 configurable LEDs, 8 configurable buttons and 1 status relay. CANbus comm.	2912411060	Five AOP-2 units can be used with each AGC 200 unit
Display gasket	Display gasket IP66	2912420030	Standard is IP52
Cables			
USB cable, 3 m (J7)	For PC utility software	1022040065	
Ethernet cable, crossed, 3 m (J4)	For option N	1022040055	
Documentation			
Designer´s Reference Handbook (K1)		4189340609	
CD-ROM with complete documentation (K2)		2304230002	

Functional block diagram

Automatic mains failure/mains power export/peak shaving/load takeover

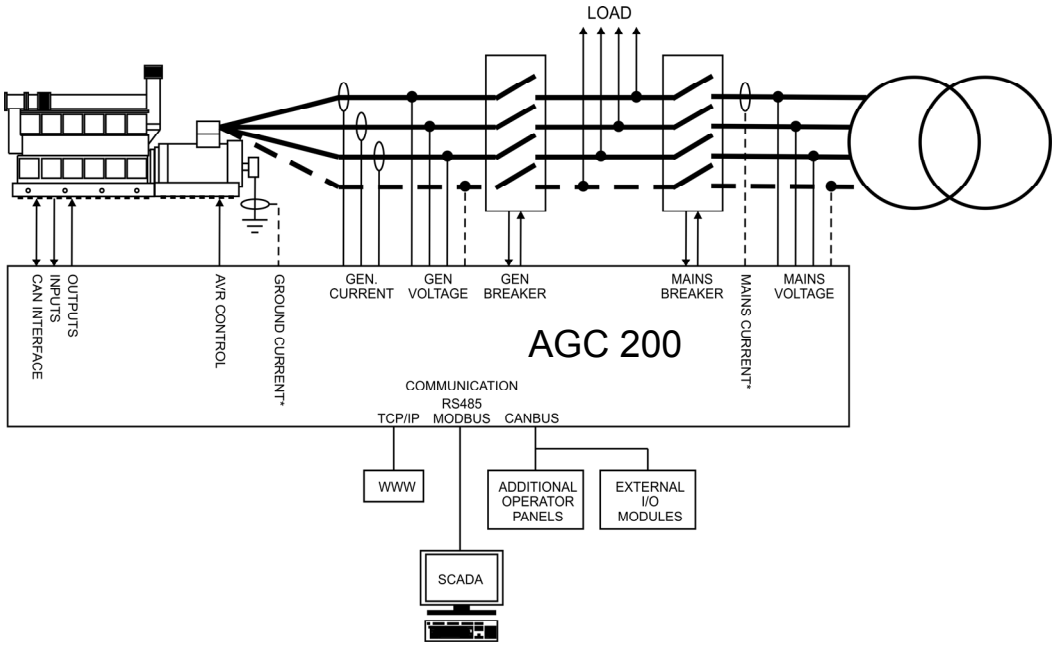

***Mains current and ground current use the same AC current input and can therefore not be mounted simultaneously. They may or may not be used.**

Single generator/load sharing/power management

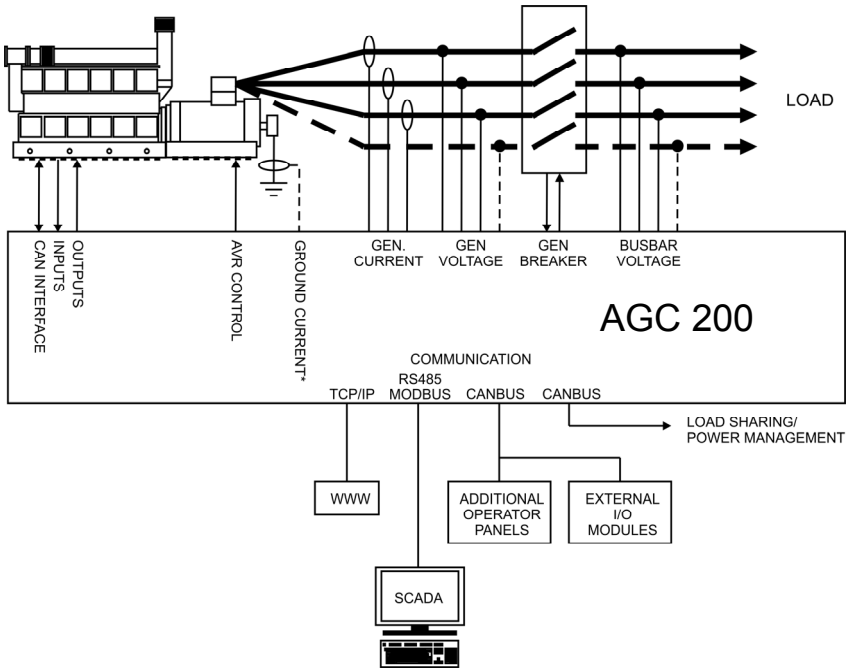

***Ground current may or may not be used.**

Display layout - AGC 213, 233, 243

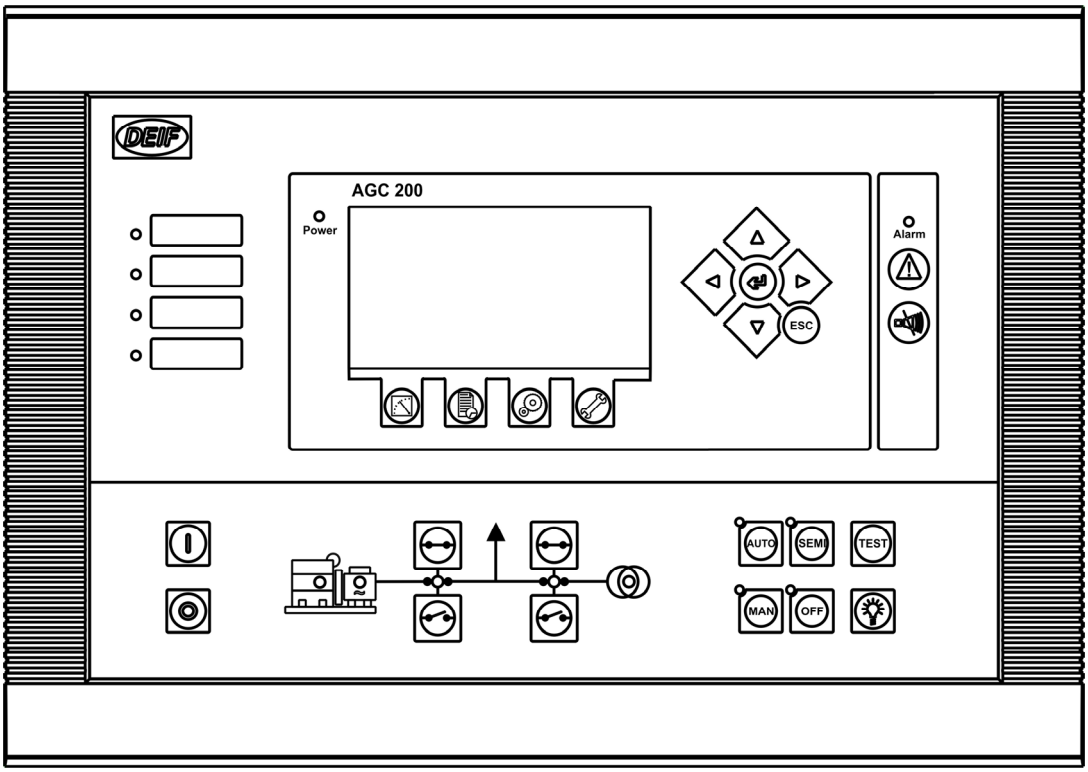

Display layout - AGC 212, 222, 232, 242

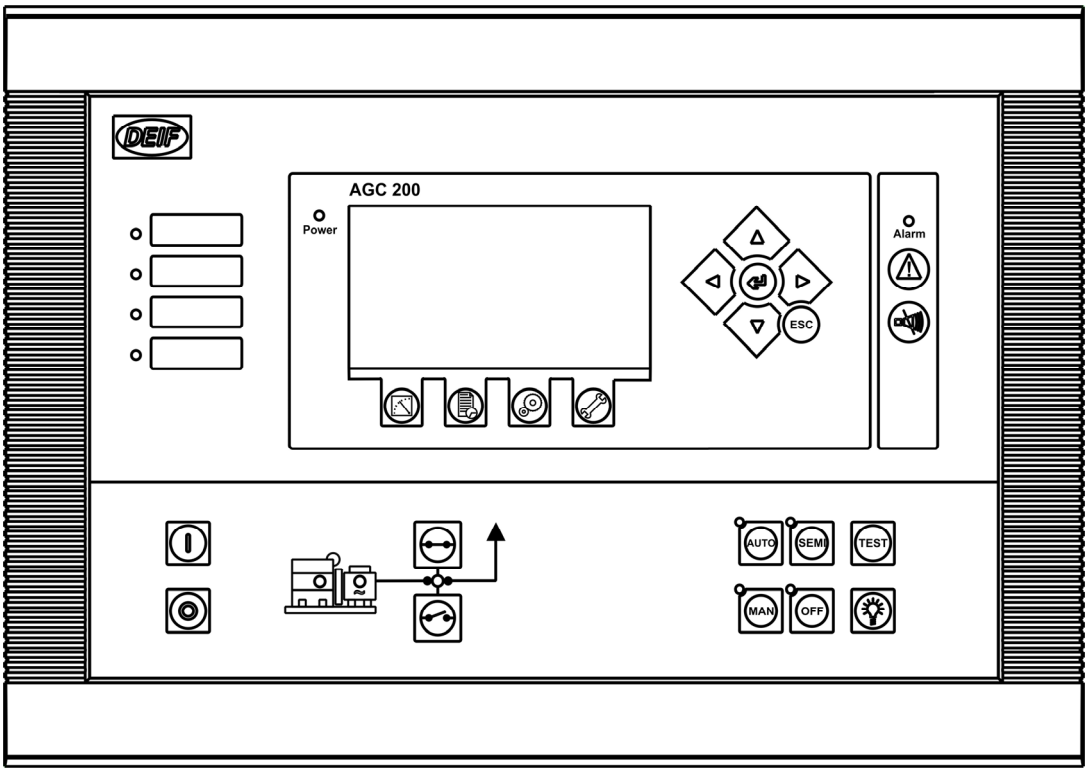

Rear side view

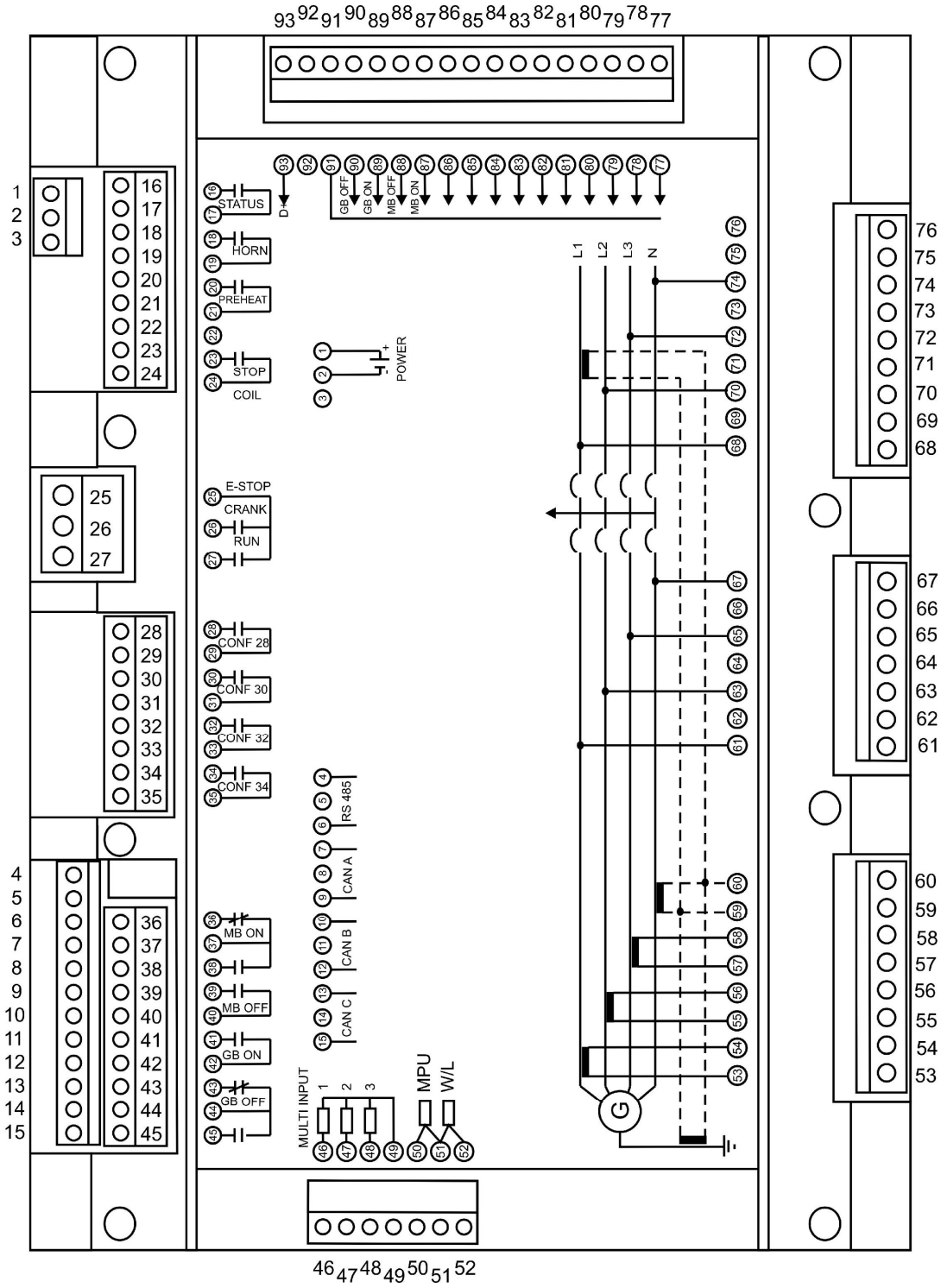

CANbus C is for engine communication. Available in all variants.
CANbus A + B combination is only available in AGC 222/232/233.
CANbus A + B + C combination is only available in AGC 24x.

Terminals 28-35 + 22-24 and 77-83 are not available in AGC 21x and 22x.

Technical specifications

Accuracy: Class 1.0

-40…15…30…70°C

Temperature coefficient:
+/-0.2% of full scale per 10°C

Short circuit:
5% of 3.5*nominal current

Earth current:
2% of 1 A or 5 A

To IEC/EN 60688

Operating temp.: -25…70°C (-13…158°F)
UL/cUL Listed: Max. ambient temp. 50°C/122°F

With option L2: -40…70°C (-40…158°F)

Storage temp.: -40…70°C (-40…158°F)

Climate: 97% RH to IEC 60068-2-30

Operating altitude: Up to 3000 m above sea level

Meas. voltage: 100…690V AC (+20%)
UL/cUL Listed: 100…600V AC

Phase to phase

Load: 1.5 MΩ

Frequency: 30…70 Hz

Meas. current: 1 A or 5A AC from current transformer

Consumption max.: 0.3 VA/phase

UL/cUL Listed: Use listed or R/C (XODW2.8) current transformers

Current overload: 4 x I_n continuously
20 x I_n 10 sec. (max. 75 A)
80 x I_n 1 sec. (max. 300 A)

Magnetic pick-up input:
Voltage: 2-70 V peak
Frequency: 10-10000 Hz
Resistance: 250-3000 Ω

Aux. supply: 6-36V DC continuously
UL/cUL Listed: 9-32.5V DC

0V DC for 50 ms when coming from at least 12V DC (cranking dropout)

Max. 25 W consumption

With option L2 -40°C (-40°F)
Max. 45 W consumption

The aux. supply inputs are to be protected by a 12A slow-blow fuse

Passive binary input voltage:
Bi-directional optocoupler
ON: 8…36V DC
<2 V: OFF
Impedance: 4.7 kΩ

Emergency stop input voltage:
ON: +8…36V DC (term. 25)
<2 V: OFF
Impedance: 4.7 kΩ

Multi-functional inputs:
Current input:
0(4)-20 mA
From active transmitter:
0-20 mA, +/-1%
Impedance: 50 Ω

Binary input:
Dry contact inputs
3V DC internal supply, with cable supervision
Max. resistance for ON detection:
100 Ω

Pt100:
-40…250°C (-40…482°F) +/-1%
To IEC/EN 60751

VDO:
0-2500 Ω, +/-1%

Relay outputs, electrical rating:

Relays 16-20 and 28-43: 250V AC/30V DC 8 A
UL/cUL Listed: 250V AC/30V DC 6 A General use
B300 Pilot duty

Relay 23: 36V DC 8 A
UL/cUL Listed: 24V DC 8 A General use

Relay 26 and 27: 36V DC 16 A
UL/cUL Listed: 24V DC 16 A General use

Mounting: Panel mounted

Front size: 312 x 219 mm (122.8 x 86.2 in)

Display: 240 x 128 pixel backlight STN

Safety: To EN 61010-1, installation category (overvoltage category) III, 600 V, pollution degree 2

To UL508 and CSA22.2 No. 14-05
Installation category (overvoltage category) III, 600 V, pollution degree 2

Protection: Front: IP52/NEMA type 1
(IP66/NEMA type 1 with gasket, option L1)
Terminals: IP20/NEMA type 1
To IEC/EN 60529

EMC/CE: To EN 61000-6-1/2/3/4
IEC 60255-26
IEC 60533 power distr. zone
IACS UR E10 power distr. zone

Vibration: 3…13.2 Hz: 2 mm_{pp}
13.2…100 Hz: 0.7 g
To IEC 60068-2-6
To IACS UR E10

10…60 Hz: 0.15 mm_{pp}
60…150 Hz: 1 g
To IEC 60255-21-1 Response (class 2)

10…150 Hz: 2 g
To IEC 60255-21-1 Endurance (class 2)

Shock: 10 g, 11 msec, half sine
To IEC 60255-21-2 Response (class 2)

30 g, 11 msec, half sine
To IEC 60255-21-2 Endurance (class 2)

50 g, 11 msec, half sine
To IEC 60068-2-27

Bump: 20 g, 16 msec, half sine
To IEC 60255-21-2 (class 2)

Material: All plastic materials are self-extinguishing according to UL94 (V1)

Plug connections: AC voltage/current inputs:
3.5 mm^2 (13 AWG) multi-stranded

Other:
1.5 mm^2 (16 AWG) multi-stranded

Service port: USB A-B
TCP/IP: RJ 45

Tightening torque, min.: AC voltage input: 0.5 Nm (5-7 lb-in)
Other: 0.5 Nm (5-7 lb-in)

Approvals: UL/cUL Listed to UL508
UL/cUL Recognized to UL2200

Weight: AGC 200: 1.6 kg (3.5 lbs)
Option J6: 0.2 kg (0.4 lbs)
AOP-2: 0.4 kg (0.9 lbs)

Response times:
(Delay set to minimum)

Busbar:

Over-/undervoltage:	< 50 ms
Over-/underfrequency:	< 50 ms

Generator:

Reverse power:	<200 ms
Overcurrent:	<200 ms
Short circuit:	< 40 ms
Directional overcurrent:	<100 ms
Over-/undervoltage:	<200 ms
Over-/underfrequency:	<300 ms
Overload:	<200 ms
Current unbalance:	<200 ms
Voltage unbalance:	<200 ms
React. power import:	<200 ms
React. power export:	<200 ms
Negative sequence I:	<400 ms
Negative sequence U:	<400 ms
Zero sequence I:	<400 ms
Zero sequence U:	<400 ms
Overspeed:	<400 ms
Digital inputs:	<250 ms
Analogue input:	<250 ms
Emergency stop:	<200 ms
Earth current:	<100 ms

Mains:

df/dt (ROCOF): (4 periods)	<130 ms
Vector jump:	< 40 ms
Positive sequence:	< 60 ms
Time-dependent undervoltage, U_t<	< 50 ms
Undervoltage and reactive power low, U_Q<	<250 ms

UL markings:

Wiring: Use 60/75°C copper conductors only

Wire size: AWG 30-12

Terminal tightening torque: 5-7 lb-in

Mounting: For use on a flat surface of a type 1 enclosure

Installation: To be installed in accordance with the NEC (US) or the CEC (Canada)

Unit dimensions in mm (inches)

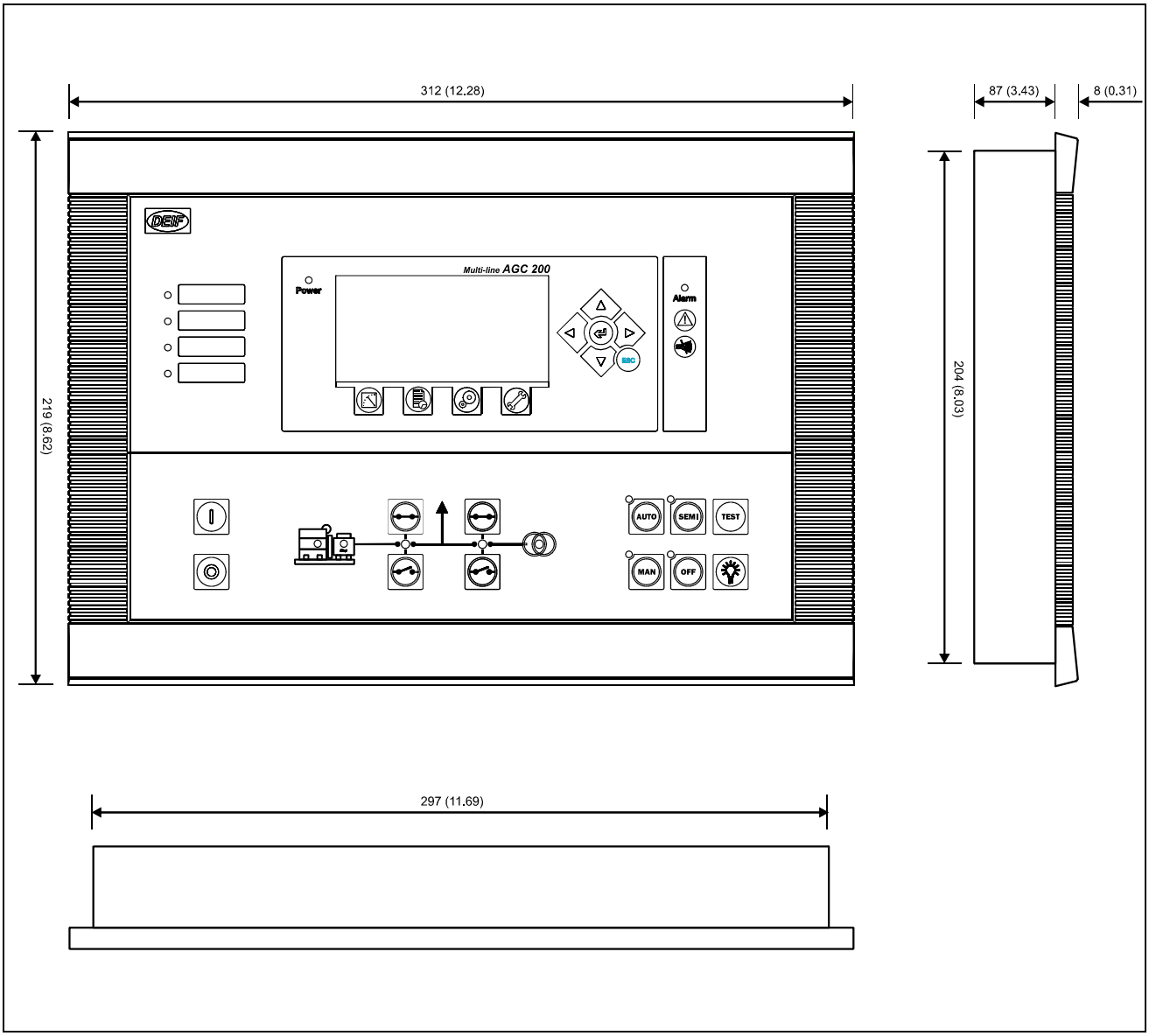

Order specifications

Variants:

Mandatory information			Additional options to the standard variant					
Item no.	**Type**	**Variant no.**	**Option**	**Option**	**Option**	**Option**	**Option**	**Option**

Example:

Mandatory information			Additional options to the standard variant					
Item no.	**Type**	**Variant no.**	**Option**	**Option**	**Option**	**Option**	**Option**	**Option**
2912420060-04	AGC 232	04	C2	H2	L2			

Accessories:

Mandatory information		
Item no.	**Type**	**Accessory**

Example:

Mandatory information		
Item no.	**Type**	**Accessory**
1022040055	Accessory for AGC 200	Ethernet cable - 3 m crossed (J4)

Due to our continuous development we reserve the right to supply equipment which may vary from the described.

***DEIF A/S**, Frisenborgvej 33*
DK-7800 Skive, Denmark

Tel.: +45 9614 9614, Fax: +45 9614 9615
E-mail: deif@deif.com, URL: www.deif.com