# GU330A Genset Controller

## Introduction:

**GU330A** is an intelligent generating set (Genset) controller with using high efficiency CMOS chip. The control procedure, protection parameters can be modified, such as Measuring, Control, Protection, Telecommunication, Remote control capability and so on. It can be fully satisfied the need of automatically control requirement of different genset from the users and manufactures.

- ✧ The controller measures and displays all genset output parameters, such as RPM, Oil pressure, Water temperature, DC source voltage, Running hours of the engine, True RMS detection of Voltage, Current, and Power ,to ensure the accuracy of the datas.
- ✧ Big LCD with back-lit display, Chinese and English selectable.
- ✧ Real time calendar and clock.
- ✧ Recording running parameter, status and events.
- ✧ Pre-set power on and shut down.
- ✧ Pre-set maintenance time and reminder.
- ✧ Good for wide range and different brands sensors being used, with ability to configure by user.
- ✧ Spare Aux. Control Relays-output and input.
- ✧ The push buttons on the control panel face are use for select the working mode, Start operating sequence, Display parameters and Modify protection parameters.
  LED display entire operating mode and fault.
  LCD display entire parameters and status.
- ✧ Parameters status collection and control module output is expandable, add mains detecting and mains and genset auto-transfer by user..
- ✧ RS485 or RS232 connection is available to achieve the Remote communication, Monitoring, Control and so on.
- ✧ The controller is integrated with anti-fire, high strength, die-casting face and powder coating steel case.
  All Connected terminals are pin-link type with screw locked. This connector is good for connecting, dismantling, maintenance and replacing.

## Measuring and Data Display:

Gen. 3-phase phase voltage: **L1-N, L2-N, L3-N**
Gen. 3-phase line voltage: **L1- L2, L2- L3, L3- L1**
Gen. 3-phase current: **L1 L2 L3**
Gen. creepage current
Gen. Frequency: **Hz（L1）**
Gen. 3-phase apparent power: **AL1 AL2 AL3**
Gen. 3-phase active power: **P L1 P L2 P L3 ΣP**
Gen. 3-phase reactive power: **QL1 QL2 QL3 ΣQ**
Gen. 3-phase power factor: **PF L1 PF L2 PF L3**
Gen. active energy: **(KWh) ΣE**
Gen. reactive energy: **(KVArh) ΣE**
Gen. phase sequence
Gen. running speed: **RPM**
Gen. oil pressure: **Kpa**
Gen water temperature: **℃**
Fuel level: **%**
Battery voltage: **VDC**
Gen. Run Hours: **HOUR**

Add expand module：
Mains 3-phase phase voltage: **L1-N, L2-N, L3-N**
Mains 3-phase line voltage: **L1- L2, L2- L3, L3- L1**
Mains Frequency: **Hz（L1）**
Mains phase sequence
Expend module Aux. input:（totals 5ways）

## Panel Keys：

AUTO (Automatically operating mode)
MAN. (Manual operating mode)
TEST. (Test operating mode)
START. (Start-up Key)
STOP/RESET (Stop/Faults Reset)
L.TEST/MUTE (Lamp Test/Mute)
▶ (Parameter Setting)
▼ (Scroll Down/Value Decrease)
▲ (Scroll Up/Value Increase)

## Panel LED Indicator：

Charge Fail
Fail to Start
Low Oil Pressure
High Water Temperature
Over-speed

E. Stop
Gen. Working Order Indicator
Gen. Power on Indicator
Mains Working Order Indicator
Mains Power on Indicator
Auto-operating Mode Indicator
Manual-operating Mode Indicator
Test Operating Mode Indicator
Gen. Start-up Indicator
Stop/Fault to Stop Indicator
Mute Indicator

## Input of Switch：

Gen. Remote Start Signal
E. Stop Signal
High Temperature Signal (Alarm/Stop)
Low Oil Pressure (Alarm/Stop)
Pick-up
Aux. Switch Input Signal
Expand Module defining Relay Input (Max.8 ways)

## Output of Control Relay：

Fuel Solenoid Output
Start-up Output
DC Charger Excited Output
Gen. Normal Running
Programmable Aux. Control Relay Output (3 ways in total)
Extension card Programmable Control Relay Output (4ways in total)

## Other Parameters:

DC Source
Voltage Range: 12V/24V (8~35VDC series)
Max. Consume Current: @12V 0.4A , @24V 0.2A
AC Input Voltage: Phase Voltage 10~300VAC RMS (AC Frequency≥40 Hz)
AC Input Frequency: 3~70HZ (Voltage≥10V)
Pickup Frequency: Max. 10000Hz
Pickup Voltage: 1~70VAC
Fuel/Start Relay Output: 10A/30VDC
Aux. Relay Output: 3A/30VDC
Operating Temperature: -20℃~50℃
Storage Temperature: -40℃~80℃

## Expand Module Electrical Diagram:

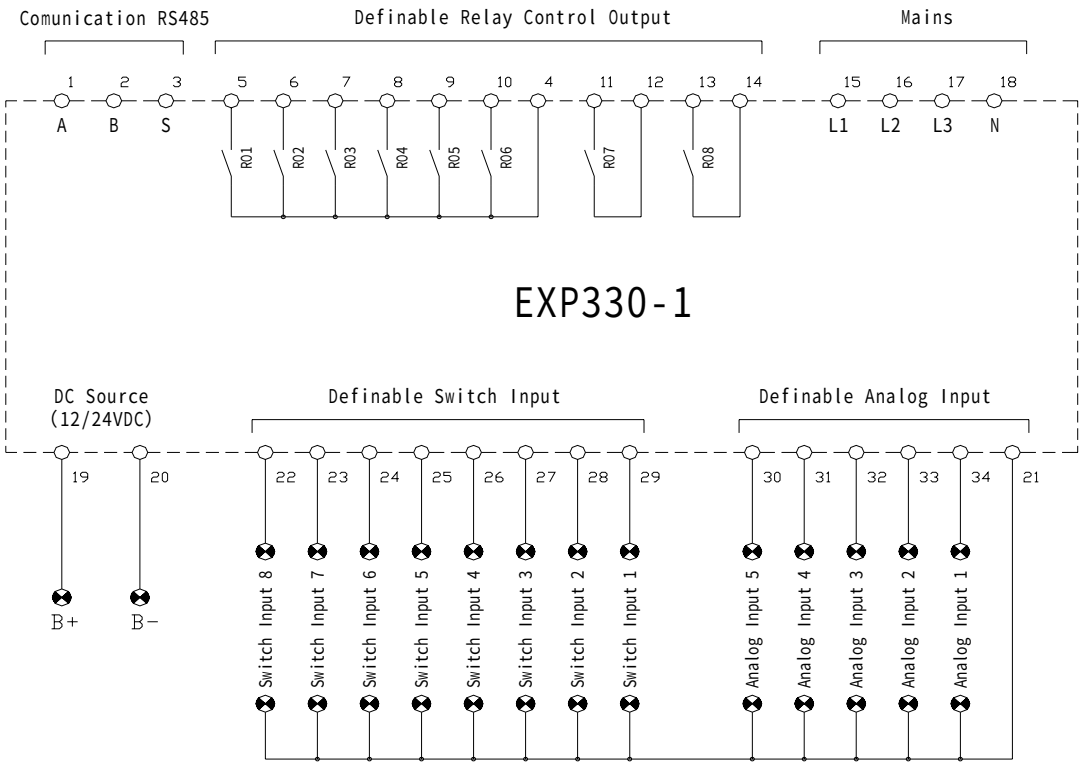

**Dimension：**

| | |
|---|---|
| Control Panel | W205mm×H156mm |
| Hatch for Installation | W186mm ×H137mm |
| Deepness | D58.5mm（unconnected） |

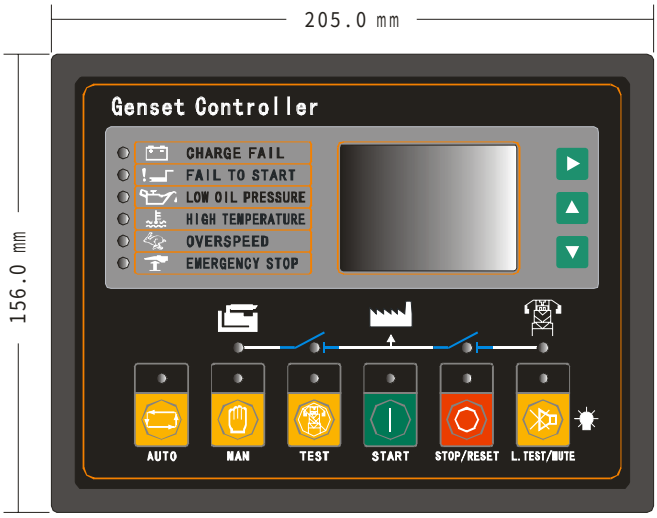


前面

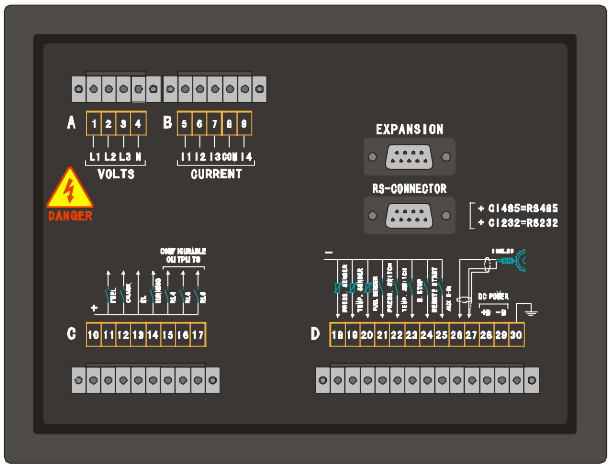


后面

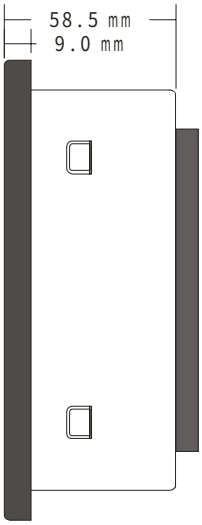


侧面

## Typical Connecting Diagram：

(Without expand module)

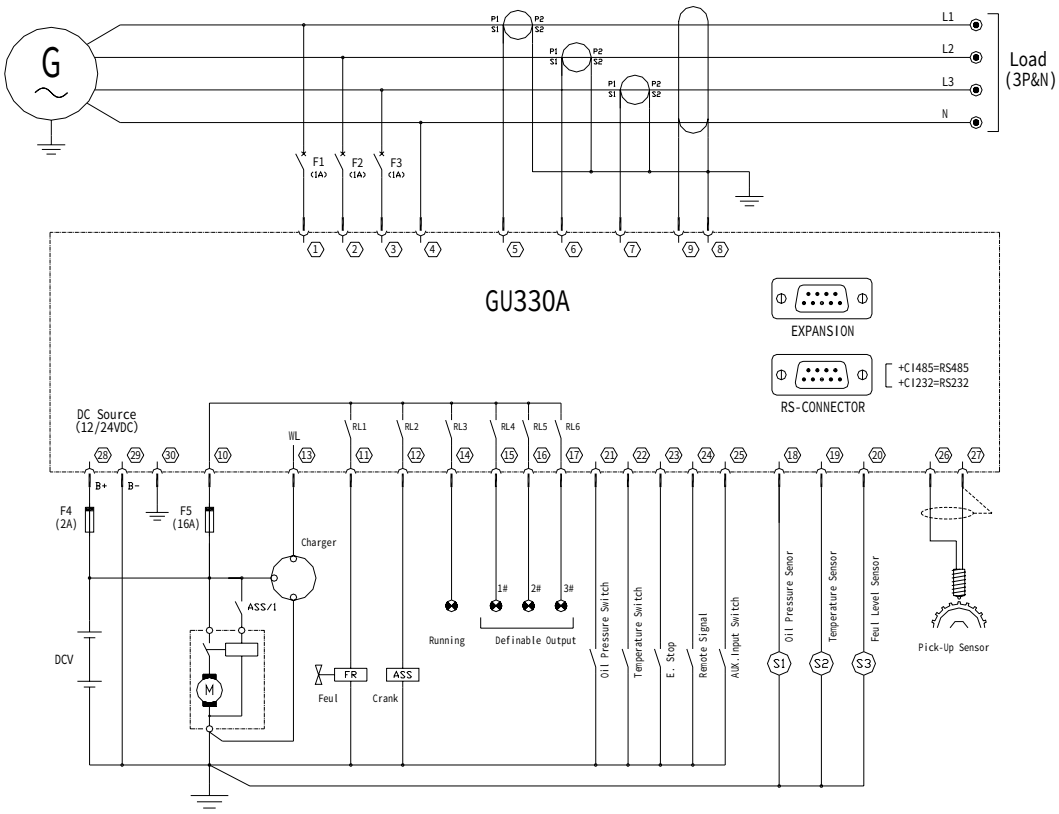


Remark:The Controller Must be Grounded Well

(With expand module and auto transfer controlling)